Atera SIGNO RT

Subaru
Crosstrek Reling 01/2024 –
Forrester Reling 04/2008 – 03/2013
Forrester Reling 03/2013 – 12/2024
Forrester Reling 12/2024 –
Justy G3X Reling 2004 –
XV Reling 01/2018 –

Suzuki
Ignis Reling 11/2000 – 01/2017
SX4 Reling 06/2006 –
Wagon R Reling 1997 –

Toyota
RAV4 Reling 08/2000 – 11/2005
RAV4 Reling 11/2005 – 03/2013
RAV4 Reling 03/2013 – 01/2019
Avensis Kombi Reling 05/2003 – 12/2008
Land Cruiser J15 2009 – 10/2024
Land Cruiser Reling 10/2024 –

Volvo
V40 Kombi Reling 1996 – 08/2012
V50 Kombi Reling 04/2004 –
V70 Kombi Reling 03/2000 – 07/2007
V70 Kombi Reling 07/2007 –
XC70 Kombi Reling 09/2001 – 07/2007
XC70 Kombi Reling 08/2007 –
XC90 Kombi Reling 01/2003 – 06/2015

VW
Passat Reling 1997 – 11/2014
Golf V Cross Reling 02/2007 –
(Markierung Innenseite Reling beachten!)
Golf VI Plus Reling 03/2009 – 05/2014
(Markierung Innenseite Reling beachten!)
Golf V Variant Reling 05/2007 – 09/2009
Golf VI Variant Reling 09/2009 – 08/2013
Caddy 3 Reling 09/2010 – 06/2015

048 137 / 048 237 / 048 337 / 048 737

Passend für Fahrzeugtyp:	Baujahr:
Suitable for vehicle type:	Model year:

BMW
X3 Reling 2003 – 11/2010
X5 Reling (nicht/not Individual) 2000 – 11/2013

Citroën
C Crosser Reling 07/2007 –
Berlingo XTR Reling 04/2009 – 09/2018
Berlingo Multispace Reling 2009 – 09/2018

Dacia
Duster Reling 07/2024 –
(nicht für modulare Reling/ not for modular roof bars)

Fiat
Panda Reling 09/2003 – 02/2012
Panda Cross Reling 02/2006 – 02/2012
Fiorino Reling 02/2008 –

Ford
Mondeo Turnier Reling 06/2007 – 02/2012
Kuga Reling 05/2008 – 03/2013
Kuga Reling 03/2013 – 04/2020
Galaxy Reling 1995 – 05/2006
Ranger Doppelkabine (Wildtrak) 03/2012 –

Jeep
Renegade 10/2014 –

Kia
Sorrento Reling 12/2009 – 10/2012

Mazda
CX 9 Reling 2009 –

Mercedes Benz
M-Klasse W163/164 Reling 2007 – 11/2011
M-Klasse W166 Reling 11/2011 –
GL X166 Reling 11/2012 – 04/2016
GLS X166 Reling 04/2016 – 10/2019
GLS X167 Reling 10/2019 –
GLE W166 Reling 09/2015 – 04/2019
GLE V167 Reling 04/2019 –
X-Klasse Reling W470 11/2017 –

Mitsubishi
Pajero (3+5-türig/doors) Reling 02/2007 –
Outlander Reling 02/2007 – 10/2012

Nissan
Murano Reling 05/2003 – 10/2008
Qashqai Reling 03/2010 – 02/2014
Qashqai 2 Reling 10/2008 –

Opel
Combo Reling 09/2018 –

Peugeot
Rifter Reling 09/2018 –

Renault
Koleos Reling 09/2008 – 06/2017
Alaskan Reling 11/2017 –

Ssangyong
Rexton Reling 11/2017 –
Korando Reling 08/2019 –

VW
Sharan Reling 1995 – 09/2010
Touran Reling 01/2003 – 09/2015
Touran Cross Reling 03/2007 –

048 150 / 048 250

Passend für Fahrzeugtyp:	Baujahr:
Suitable for vehicle type:	Model year:

Honda
FR-V Reling 2004 –

Mercedes Benz
Viano Reling 1996 – 08/2003
Vito, Viano (W639) Reling 08/2003 – 07/2014
Vito Reling 1996 – 08/2003
Vito (W447) Reling 07/2014 –

FR

Atera
GERMAN ENGINEERING
Atera GmbH
Im Herrach 1
D-88299 Leutkirch
Internet: www.atera.de

Ref.-Nr.: 048 110_096444811002_992570042503 Ref.-Nr.: 048 310_096444831001_992570042503
Ref.-Nr.: 048 122_096444812202_992570042503 Ref.-Nr.: 048 322_096444832201_992570042503
Ref.-Nr.: 048 137_096444813702_992570042503 Ref.-Nr.: 048 337_096444833701_992570042503
Ref.-Nr.: 048 150_096444815002_992570042503 Ref.-Nr.: 048 721_096444872101_992570042503
Ref.-Nr.: 048 210_096444821002_992570042503 Ref.-Nr.: 048 722_096444872201_992570042503
Ref.-Nr.: 048 222_096444822202_992570042503 Ref.-Nr.: 048 737_096444873701_992570042503
Ref.-Nr.: 048 237_096444823702_992570042503
Ref.-Nr.: 048 250_096444825002_992570042503
Stand/State: 16/06/2025- © ATERA GmbH - R03 V07

Atera SIGNO RT

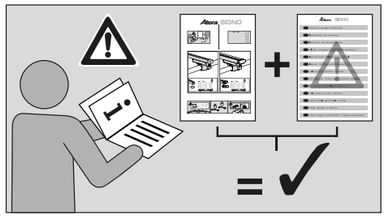

Art.-Nr. / Part-No.:

048 110 048 210 048 310 048 721
048 122 048 222 048 322 048 722
048 137 048 237 048 337 048 737
048 150 048 250

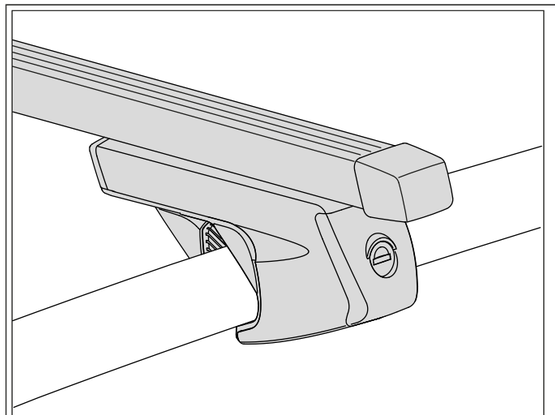

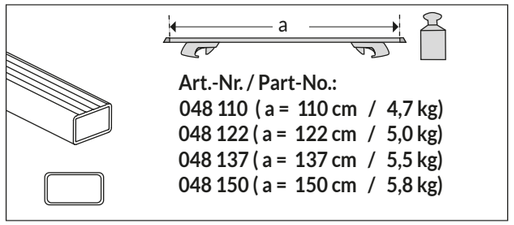

Art.-Nr. / Part-No.:
048 110 (a = 110 cm / 4,7 kg)
048 122 (a = 122 cm / 5,0 kg)
048 137 (a = 137 cm / 5,5 kg)
048 150 (a = 150 cm / 5,8 kg)

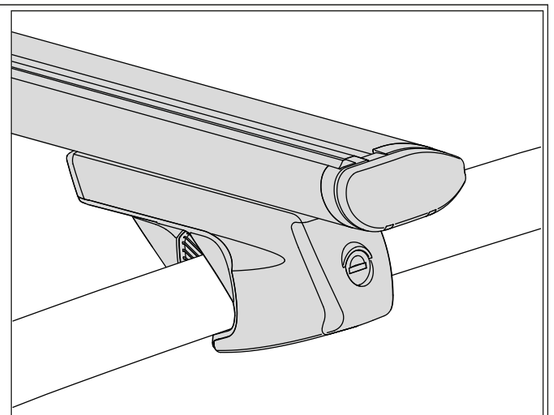

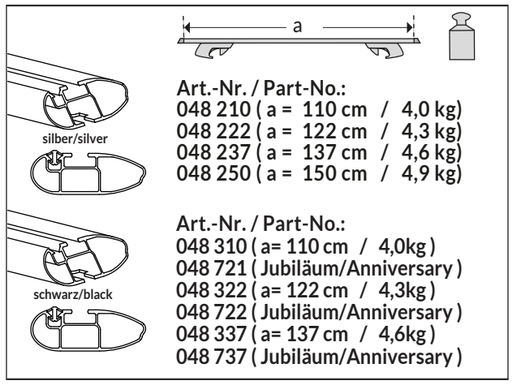

Art.-Nr. / Part-No.:
048 210 (a = 110 cm / 4,0 kg)
048 222 (a = 122 cm / 4,3 kg)
048 237 (a = 137 cm / 4,6 kg)
048 250 (a = 150 cm / 4,9 kg)

Art.-Nr. / Part-No.:
048 310 (a= 110 cm / 4,0kg)
048 721 (Jubiläum/Anniversary)
048 322 (a= 122 cm / 4,3kg)
048 722 (Jubiläum/Anniversary)
048 337 (a= 137 cm / 4,6kg)
048 737 (Jubiläum/Anniversary)

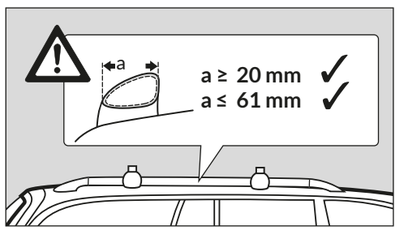

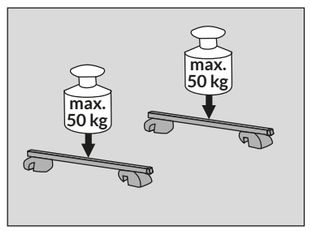

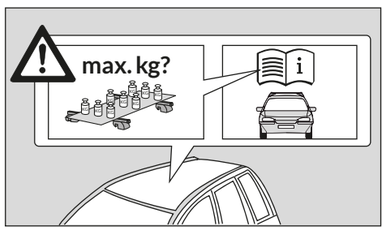

(D) **Inhalt** (GB) Contents (F) Sommaire (NL) Inhoud (I) Indice (E) Índice (CZ) Obsah (PL) Zawartość (RO) Conţinut (SK) Obsah (DK) Indhold (FIN) Sisältö (RUS) Содержание

2 ▶ 3

(D) **Lieferumfang / Ersatzteilübersicht** (GB) Scope of delivery / spare part overview (F) Pièces fournies à la livraison / liste des pièces détachées (NL) Omvang van de levering / Overzicht van de reserveonderdelen (I) Dotazione di fornitura / panoramica pezzi di ricambio (E) Volumen de suministro / resumen de piezas (CZ) Součást dodávky / Přehled náhradních dílů (PL) Zakres dostawy / zestawienie części zamiennych (RO) Volumul livrării / Prezentarea generală a pieselor de schimb (SK) Súčasť dodávky / Prehľad náhradných súčastí (DK) Leveringsomfang / Reservedelsoversigt (FIN) Toimituslaajuus / Varaosat (RUS) Комплект поставки / обзор запасных частей

3 ▶ 6

(D) **Montageinformation** (GB) Installation information (F) Informations pour le montage (NL) Montage-informatie (I) Informazioni di montaggio (E) Información de montaje (CZ) Informace k montáži (PL) Informacja dotycząca montażu (RO) Informaţie de montaj (SK) Informácie o montáži (DK) Monteringsinformation (FIN) Asennustietoja (RUS) Сведения о монтаже

7 ▶ 8

(D) **Fahrzeugverwendungsliste** (GB) Vehicle usage list (F) Liste des véhicules compatibles (NL) Lijst van te gebruiken voertuigen (I) Elenco veicoli compatibili (E) Lista de vehículos compatibles (CZ) Seznam pro použití vozidla (PL) Lista pojazdów, do których pasują bagażniki (RO) Indicaţii de utilizare ale vehiculului (SK) Zoznam na použitie vozidla (DK) Passer til følgende biler (FIN) Ajoneuvokäyttöluettelo (RUS) Для использования с автомобилями

(D) **Änderungen bezüglich Konstruktion, Ausstattung, Farbe sowie Irrtum bleiben vorbehalten. Abbildungen sind unverbindlich.** (GB) Right reserved to make changes to design, configuration and colour – errors and omissions excepted. The illustrations are non-binding (F) Sous réserve de modifications de la construction, de l'équipement et de la couleur. Sous réserve d'erreurs. Les illustrations ne sont pas contractuelles. (NL) Wijzigingen in de constructie, uitrusting, kleur en vergissingen blijven voorbehouden. Afbeeldingen zijn vrijblijvend. (I) Ci si riserva il diritto di apportare modifiche in relazione alla struttura, all'equipaggiamento e al colore, nonché la possibilità di errori e omissioni. Le illustrazioni fornite non sono vincolanti. (E) Reservado el derecho a realizar cambios relacionados con la construcción, el equipamiento, el color y debido a error. Las figuras son sin compromiso. (CZ) Změny týkající se konstrukce, vybavení, barvy a chyb jsou vyhrazeny. Vyobrazení jsou nezávazná. (PL) Zastrzega się prawo wprowadzania zmian konstrukcji, wyposażenia, koloru a także możliwość pomyłki. Ilustracje są niewiążące. (RO) Compania producătoare îşi rezervă toate drepturile în legătură cu construcţia, echiparea, culoarea precum şi cu posibilitatea unor erori. Ilustraţiile nu angajează compania. (SK) Zmeny týkajúce sa konštrukcie, vybavenia, farby a chýb sú vyhradené. Vyobrazenia sú nezáväzné. (DK) Ændringer vedrørende konstruktion, udstyr, farve samt fejltagelser forbeholdes. Afbildningerne er ikke bindende. (FIN) Rakennetta, varustelua, väriä koskevat muutokset sekä virheet mahdollisia. Kuvat ovat sitoumuksetta. (RUS) Возможны изменения конструкции, оснащения, цвета, а также ошибки. Иллюстрации приведены без обязательств.

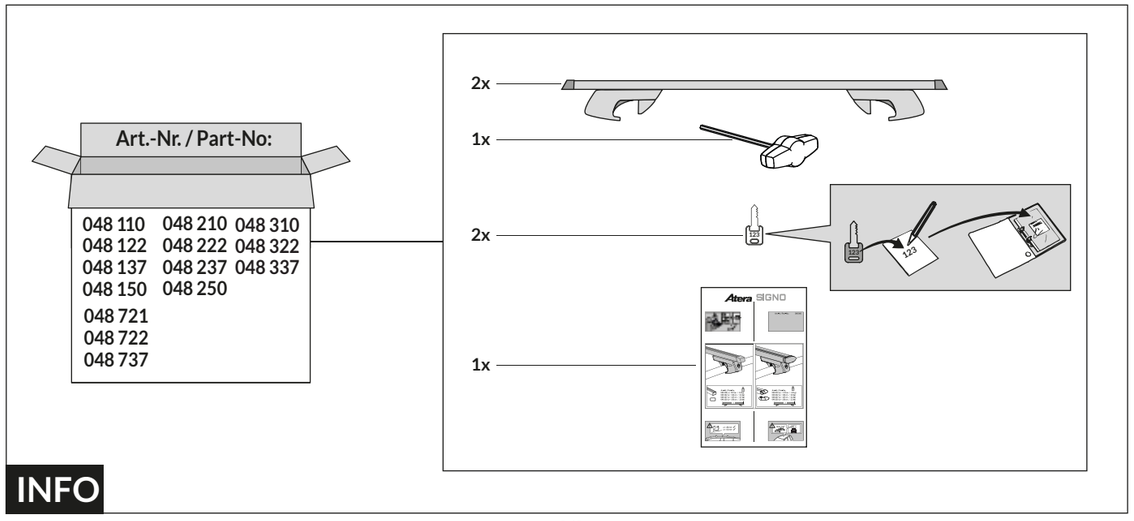

INFO

048 110 / 048 210 / 048 310 / 048 721

Passend für Fahrzeugtyp: Suitable for vehicle type:	Baujahr: Model year:
Chevrolet	
Spark Reling	03/2010 –
Dacia	
Logan Kombi Reling	01/2007 –
Ford	
Focus Turnier Reling	1999 – 12/2004
Hyundai	
i30 CW Reling	04/2008 – 09/2012
Inster Reling	02/2025 –
Tucson Reling	2004 – 03/2010
Matrix Reling	09/2001 –
Santa Fe Reling	2000 – 03/2006
Peugeot	
406 Break Reling	1996 –
Subaru	
Impreza Reling	1993 – 03/2013
Legacy Outback Reling	1996 – 10/2003
Toyota	
Avensis Kombi Reling	1998 – 05/2003
Yaris Verso Reling	11/1999 –
VW	
Polo Cross Reling	01/2006 – 06/2010

048 122 / 048 222 / 048 322 / 048 722

Passend für Fahrzeugtyp: Suitable for vehicle type:	Baujahr: Model year:
Audi	
A4 Avant Reling	09/2001 – 03/2008
A6 Avant Reling	03/1998 – 03/2005
A6 Allroad Reling	05/2000 – 06/2006
BMW	
3er Touring Reling	09/2005 – 09/2012
5er Touring Reling	1997 – 09/2010
Chevrolet	
Cruze SW Reling	2012 –
Captiva Reling	06/2006 –
Chrysler	
300C Touring Reling	2006 –
Citroën	
C3 Picasso Reling	03/2009 –
C5 Tourer Kombi Reling (Markierung Innenseite Reling beachten!)	04/2008 –
C5 Crosstourer	06/2014 –
C3 Aircross Reling	11/2017 – 05/2025
C5 Aircross Reling	02/2019 –
Dacia	
Dokker Reling	03/2013 –
Dokker Stepway Reling	11/2017 –
Duster Reling	04/2010 – 01/2014
Sandero Stepway Reling	10/2009 –
Fiat	
Freemont Reling	02/2008 –
Sedici Reling	05/2006 –
Ford	
Mondeo Turnier Reling	06/2007 – 02/2012
Grand C Max Reling	11/2010 –
Focus Turnier Reling	01/2008 – 04/2011
Tourneo Courier Reling	06/2014 –
Honda	
Accord Tourer Reling	03/2003 –
Jazz Crosstar Reling	06/2020 –
Hyundai	
Santa Fe Reling	02/2010 – 09/2012
i20 Active	01/2016 –
Infinity	
QX70 Reling	01/2013 –
Jeep	
Cherokee Reling	10/2001 – 11/2008
Cherokee Reling	07/2014 –
Kia	
Cee´d Sportswagon Reling	09/2007 – 09/2012
Stonic Reling	09/2017 –
Mazda	
MPV Reling	11/1999 –
5 Reling	06/2005 – 10/2010
Demio Reling	08/1998 –
Premacy Reling	06/1999 – 2005
6 Kombi Reling	2003 – 12/2024
626 Reling	08/2002 –
Mercedes Benz	
E-Klasse T-Modell S211 Reling	03/2003 – 11/2009
E-Klasse T-Modell S212 Reling	11/2009 – 10/2016
C-Klasse S204 Reling	12/2007 – 09/2014
GLK X204 Reling	10/2008 –
GLB X247 Reling	12/2019 –
Mini	
Countryman	02/2017 –
Nissan	
Murano Reling	10/2008 –
X-Trail	07/2014 – 08/2017
X-Trail	08/2017 – 10/2022
Navara NP300 DC Reling	02/2016 –
Opel	
Omega Caravan Reling	1994 – 2003
Zafira Reling	04/1999 – 07/2005
Antara Reling	09/2006 –
Peugeot	
207 SW Reling	06/2007 –
307 SW Reling	04/2002 –
308 SW Reling	05/2008 – 05/2014
407 SW Reling	08/2004 –
Partner Reling	05/2008 – 08/2018
Partner Tepee Reling	05/2008 – 08/2018
Porsche	
Cayenne Reling	2003 – 03/2010
Renault	
Scenic Xmod Reling	05/2013 –
Clio Grandtour Reling	01/2008 –
Megane Grandtour Reling	09/2003 – 09/2016
Laguna Grandtour Reling	01/2008 –
Grand Scenic Reling	05/2013 – 12/2016
Seat	
Exeo ST Reling	09/2009 –
Skoda	
Fabia Kombi Reling	12/2007 – 01/2015
Roomster Reling	07/2006 –
Praktik Reling	03/2007 –
Suberb Kombi Reling	01/2010 – 09/2015
Yeti Reling	08/2009 –
Ssangyong	
Rodius Reling	07/2013 –
Rexton Reling	2004 – 11/2017
Korando Reling	1998 – 08/2019

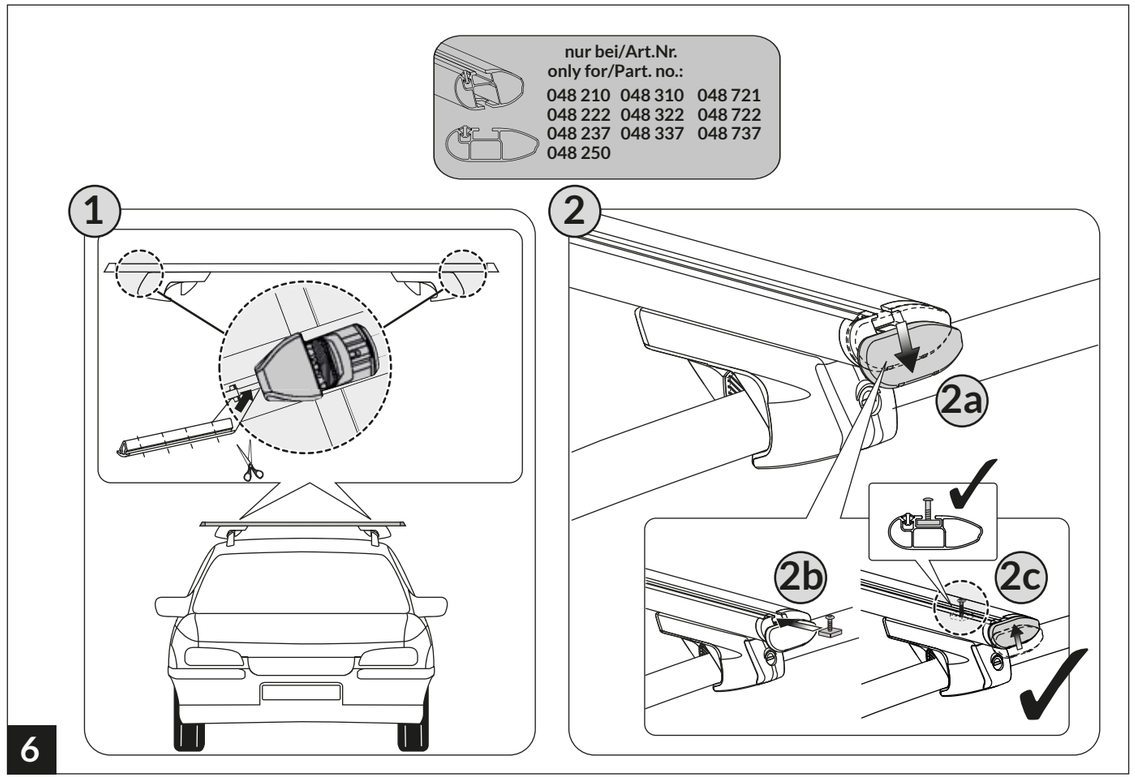

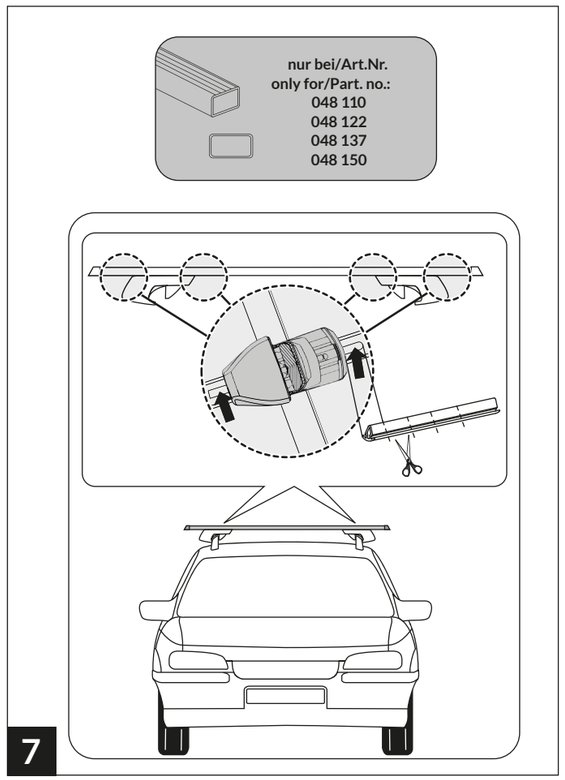

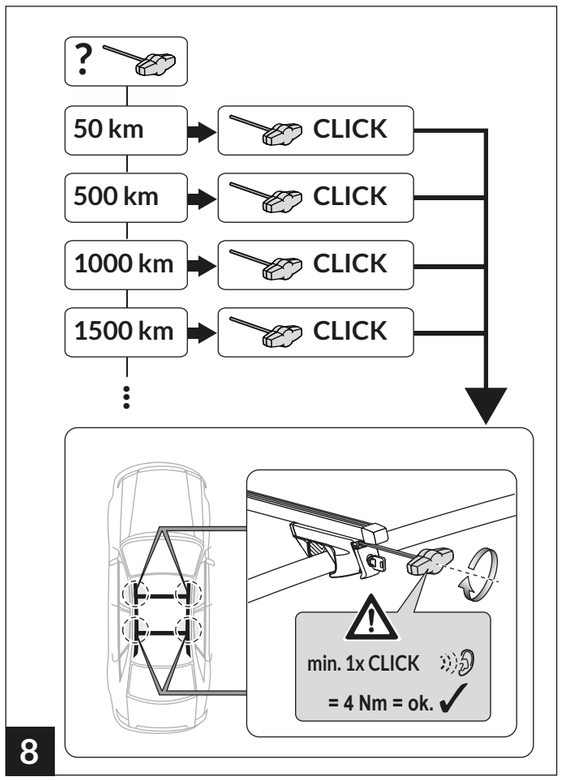

Atera SIGNO RT

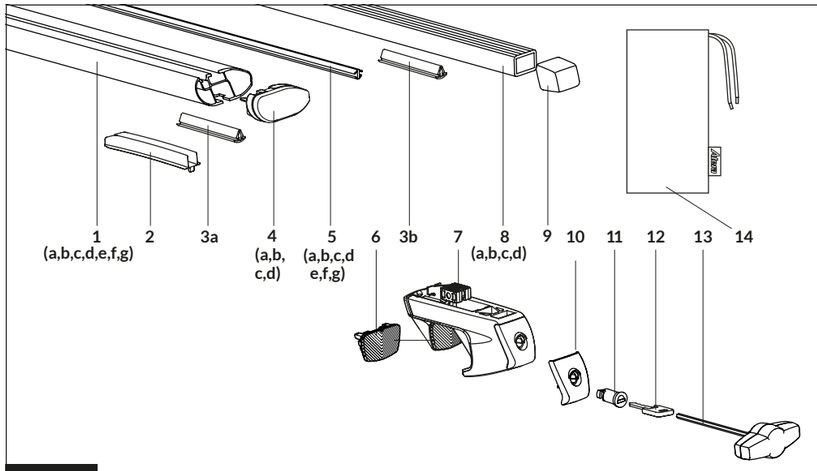

1-a	9945700222 (110 cm)
1-b	9945700223 (122 cm)
1-c	9945700224 (137 cm)
1-d	9945700225 (150 cm)
1-e	9945700423 (schwarz/black, 110 cm)
1-f	9945700424 (schwarz/black, 122 cm)
1-g	9945700425 (schwarz/black, 137 cm)
2-	9918700798
3-a	9919700143
3-b	9919700143
4-a	8828700062 (links/left)
4-b	8828700063 (rechts/right)
4-c	8828700089 (rot/red, links/left)
4-d	8828700090 (rot/red, rechts/right)
5-a	8828700067 (110 cm)
5-b	8828700068 (122 cm)
5-c	8828700069 (137 cm)
5-d	8828700070 (150 cm)
5-e	8828700091 (rot/red, 110 cm)
5-f	8828700092 (rot/red, 120 cm)
5-g	8828700093 (rot/red, 137 cm)
6-	9918700790
7-	8832700387
8-a	9945700373 (110 cm)
8-b	9945700374 (122 cm)
8-c	9945700375 (137 cm)
8-d	9945700376 (150 cm)
9-	9945700105
10-	9918701426
11-	9922700316
12-	9922700043 (0969999958)
13-	8830701041
14-	9936700178

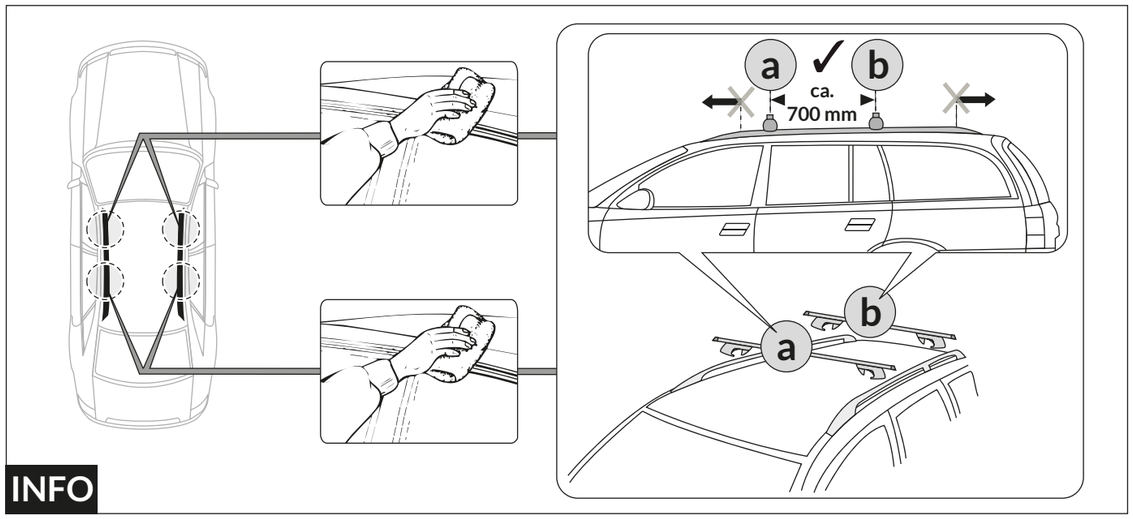

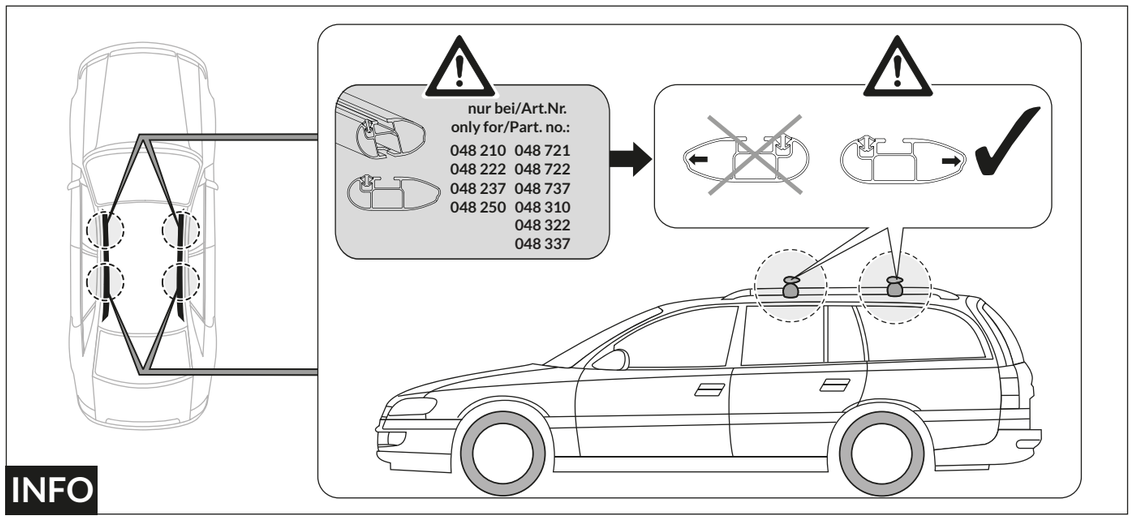

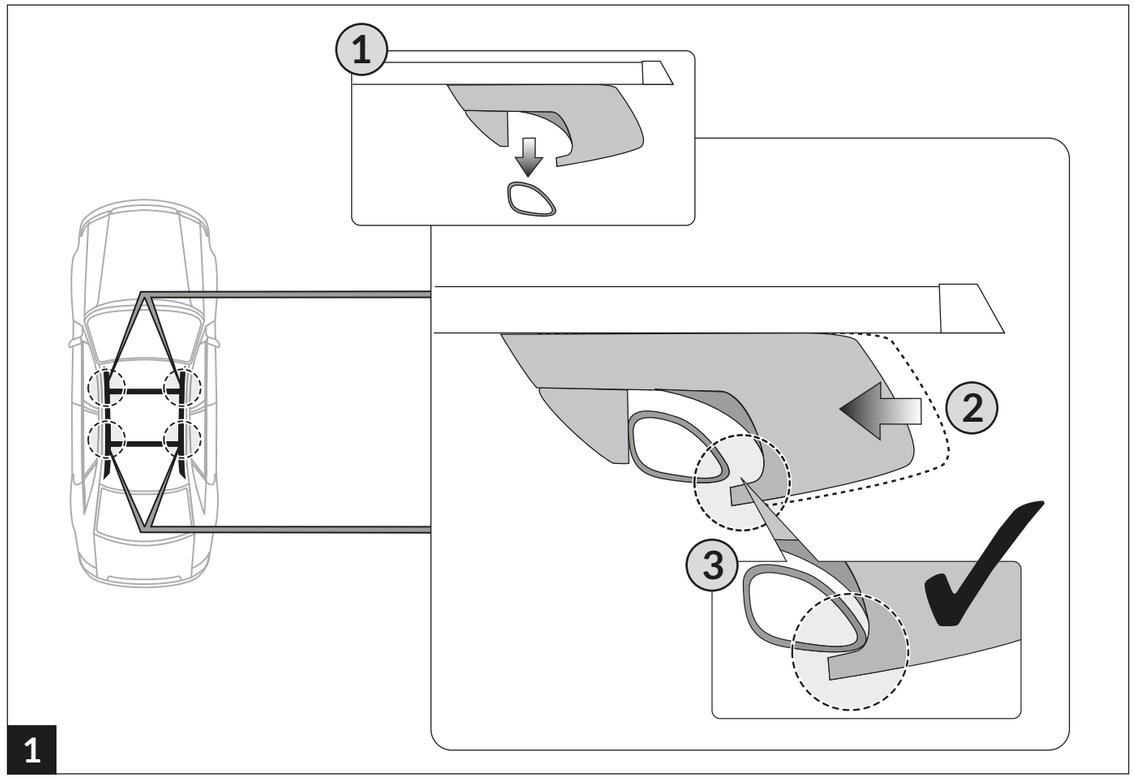

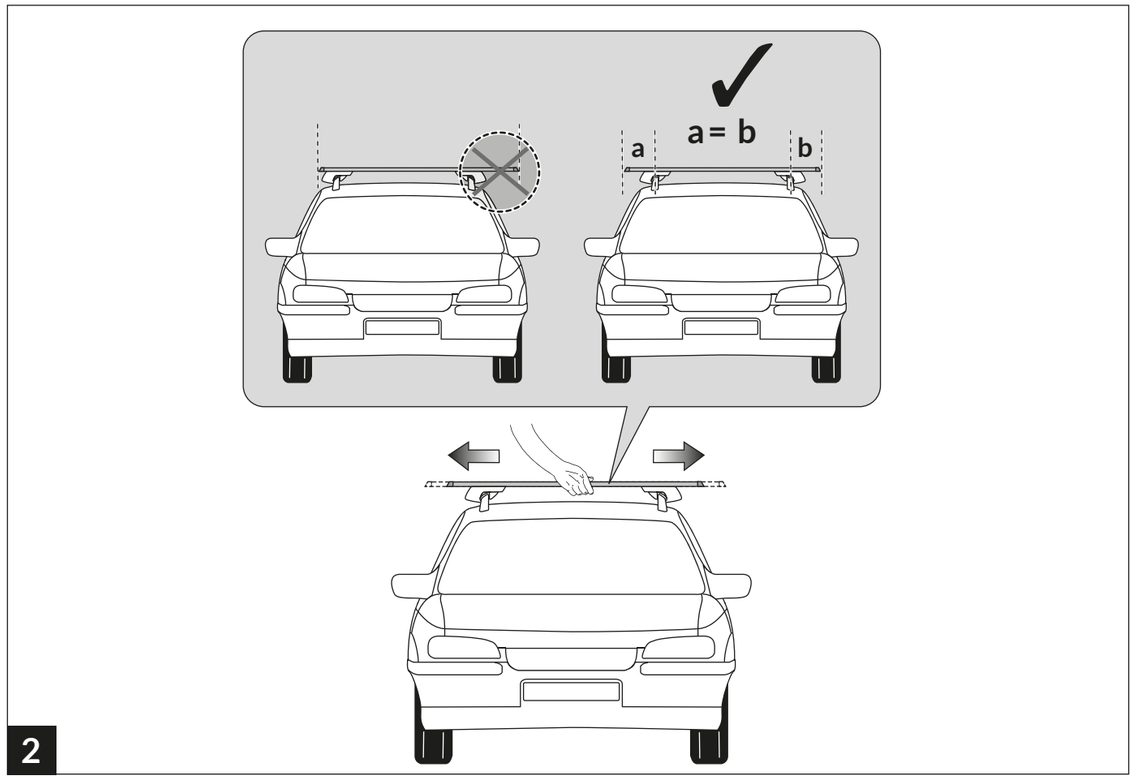
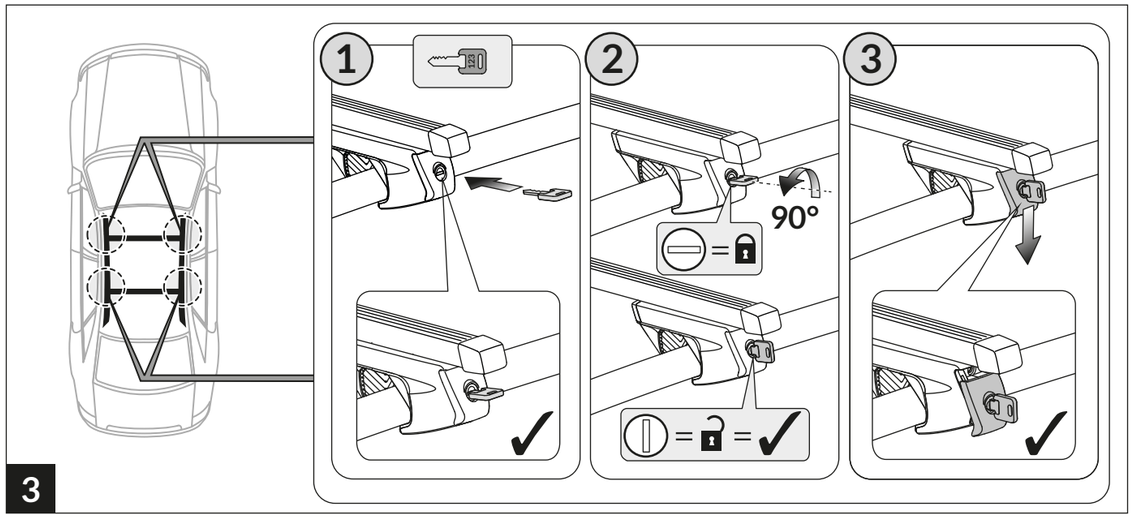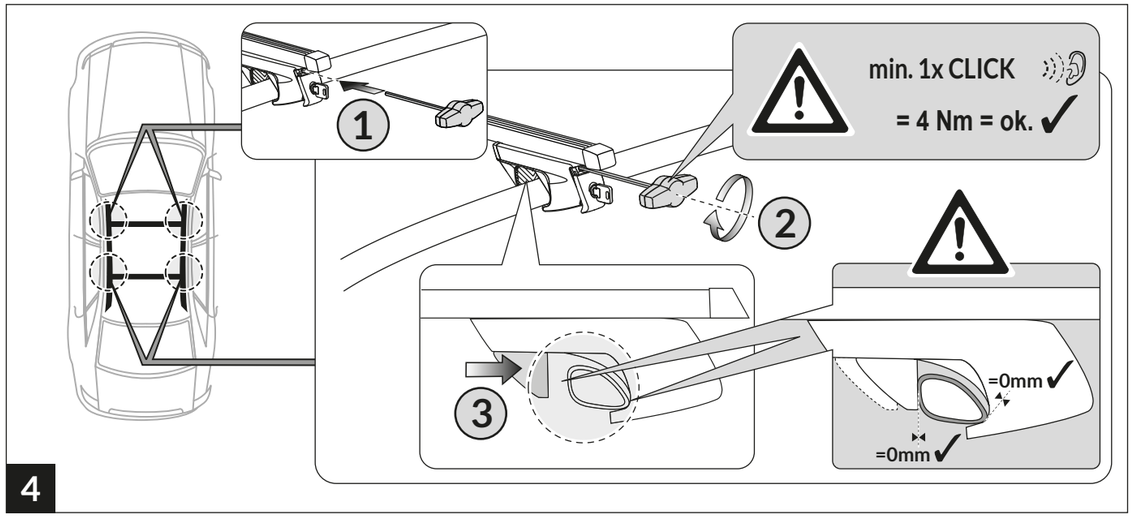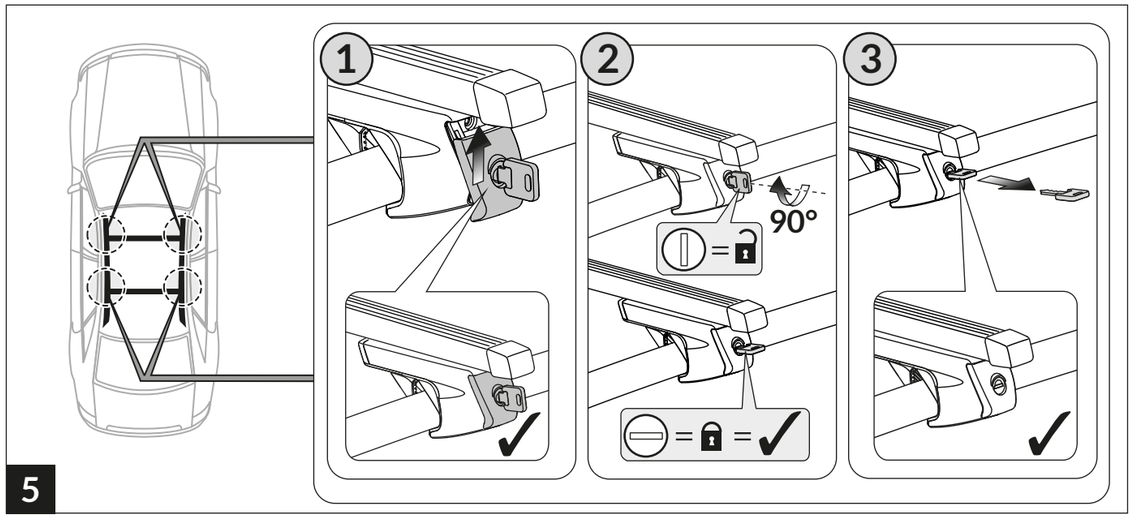
Atera SIGNO RT