Documents, do not bear a blue inked “Controlled Copy” stamp are without authorization and invalid.

Notes

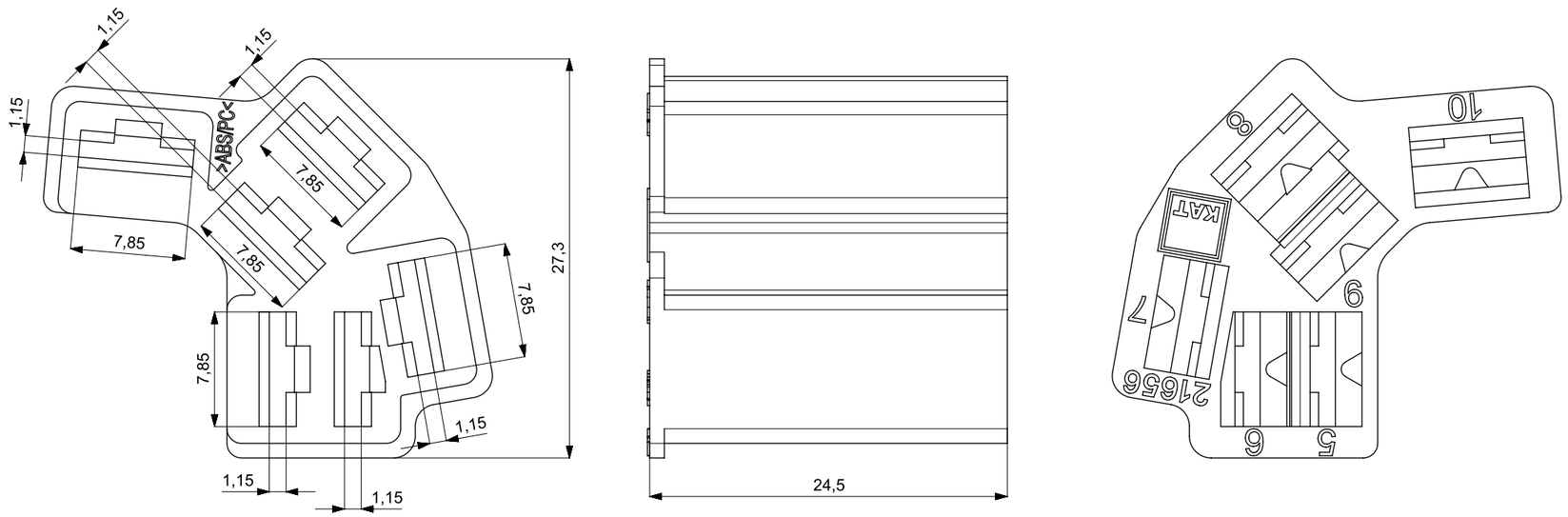

References

Isometric view/
Scale
3:2

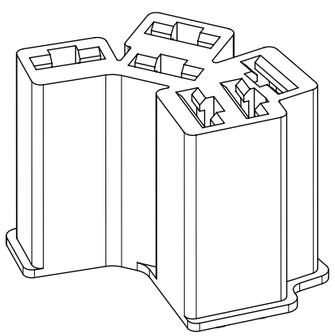

Rev. Nr.	Section	Date	Name	Revision description	Order Nr.

Part Status	Series

KAT reserves all rights, including without limitation rights of invention,copyrights, rights to names,and the right to apply for industrial property rights. All rights of use and exploitation including the right to copy and disseminate or distribute reside with us.

KAT

CAD system and administration code	SIEMENS NX (*.prt)
Material / SAP code /Part marking code: ABS	Color: Black
Weight	5,5 gr
Tensile strength	N/A
Coating material	N/A
Coating thickness	N/A
Hardness	N/A

	Name	Date	Signature	Project code
Drawn	Musa Erol	01.09.2003		K10
Responsible design	Selma Kıran	01.09.2003		
Checked	Cem KABAHASANOĞLU	01.09.2003		

Safety Doc. N/A

ISO 128

Project Name: IGNITION SWITCH_CONNECTOR 6 POLE

Scale: 5:2 / 3:2

Drawing No: 302200100079 / 31617

Format: A3

Sheet: 1

Total pages: 1

General tolerances for nominal dimensions without specified tolerance: DIN 2768 mK.

KAT MECHATRONICS

Control dim. ( ) Auxiliary dim. " SC " Significant characteristic dim. " CC " Critical characteristic dim. *All dimensions are in mm.