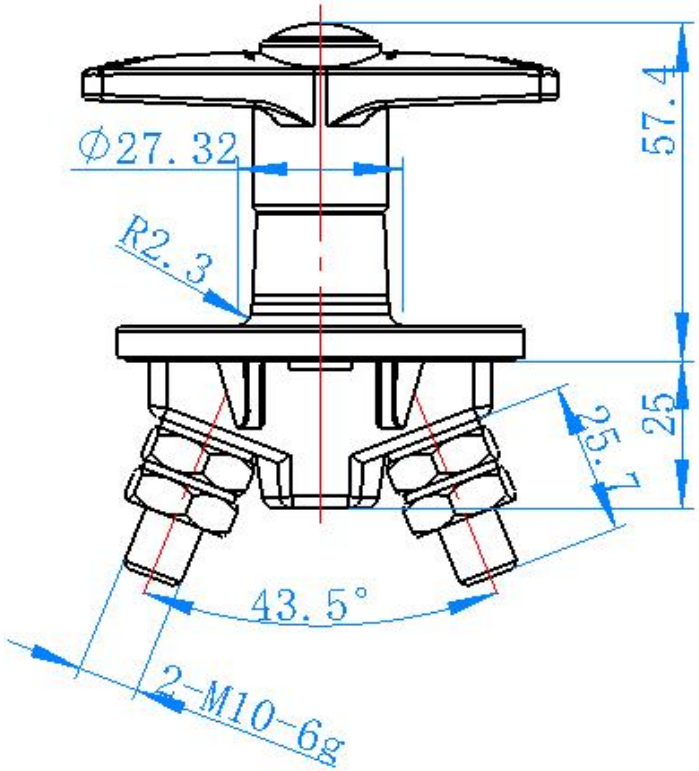

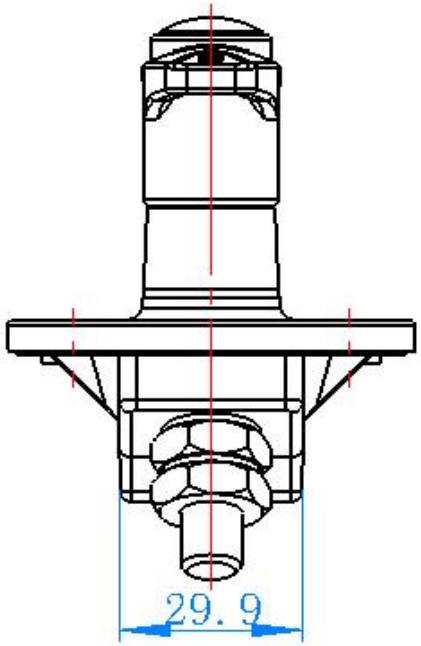

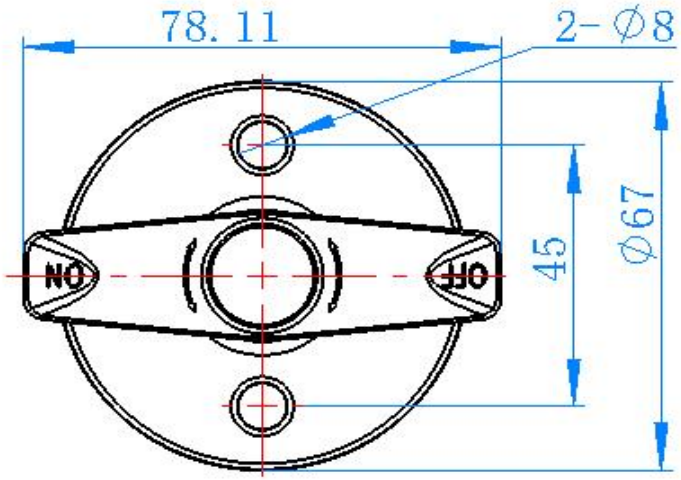

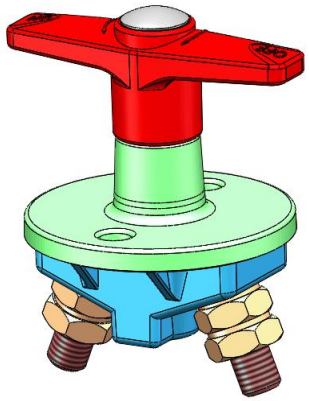

SR	DESIGN SPECIFICATIONS	
	Description	
1	Rated Voltage	12V/24V
2	Number of Poles	1 POLE
3	Continous rating	250A
4	Voltage Drop	60mV MAXIMUM
5	Overload Capacity	1000A-5seconds.
6	Insulation Resistance	1Mohm MIN. @500VDC
7	Key Type	UNREMOVABLE
8	Sealing	IP55
9	Temperature Range	-40˚C TO +85˚C

ECN	Sl.No.	Modification	Date	Name

Tolerance
0 ± 0.5
0.0 ±0.1
0.00 ±0.05

2020	Date	Name
Dm.	03.11.24	
Chkd.	03.11.24	
Aprd.	03.11.24	

KAHONWY®
Ruian Jiahong Weiye Auto Electric Co.ltd

Scale: NTS

Part No.: WH-A008

Part Name: BATTERY ISOLATOR SWITCH

Material:

Colour:

Process:

Issue No. 00

Revision No. 00